Surname	Centre Number	Candidate Number
First name(s)		0

GCSE

3601U10-1

Z22-3601U10-1

WEDNESDAY, 15 JUNE 2022 – AFTERNOON

DESIGN AND TECHNOLOGY

UNIT 1
ENGINEERING DESIGN

2 hours

For Examiner's use only		
Question	**Maximum Mark**	**Mark Awarded**
1.	**10**	
2.	**10**	
3.	**15**	
4.	**20**	
5.	**20**	
6.	**25**	
Total	**100**	

3601U101
01

ADDITIONAL MATERIALS

In addition to this examination paper, you will need a calculator.

INSTRUCTIONS TO CANDIDATES

Use black ink or black ball-point pen. Do not use gel pen or correction fluid.

You may use a pencil for graphs and diagrams only.

Write your name, centre number and candidate number in spaces at the top of this page.

Answer **all** questions.

Write your answers in the spaces provided in this booklet. If you run out of space, use the continuation page(s) at the back of the booklet, taking care to number the question(s) correctly.

INFORMATION FOR CANDIDATES

The number of marks is given in brackets at the end of each question or part question. You are advised to divide your time accordingly.

The total number of marks available is 100.

You are reminded of the need for good English and orderly, clear presentation in your answers. The quality of your written communication, including appropriate use of punctuation and grammar, will be assessed in your answer to question **4**(c).

© WJEC CBAC Ltd.

Examiner only

Answer **all** questions.

1. Study the photos below. The glass bottles have been recycled to become roof insulation.

Glass Bottles	Roof Insulation

(a) Explain an environmental advantage of recycling the glass bottles into roof insulation. [2]

.....

.....

.....

Examiner only

(b) A laptop computer has an aluminium case. The raw aluminium ore is sourced from South America, then processed and manufactured in China to be sold in the United Kingdom (UK).

(i) Describe **one** benefit this has for UK consumers. [2]

.....

.....

.....

(ii) Describe why the laptop has a high carbon footprint. [2]

.....

.....

.....

(c) Explain how a manufacturer could produce the aluminium laptop for the UK market in a more sustainable way. [4]

.....

.....

.....

.....

.....

.....

3601U101 03

Examiner only

2. The graph below shows a product life cycle.

(a) Label the **four** stages of a product life cycle in the table below. 4 x [1]

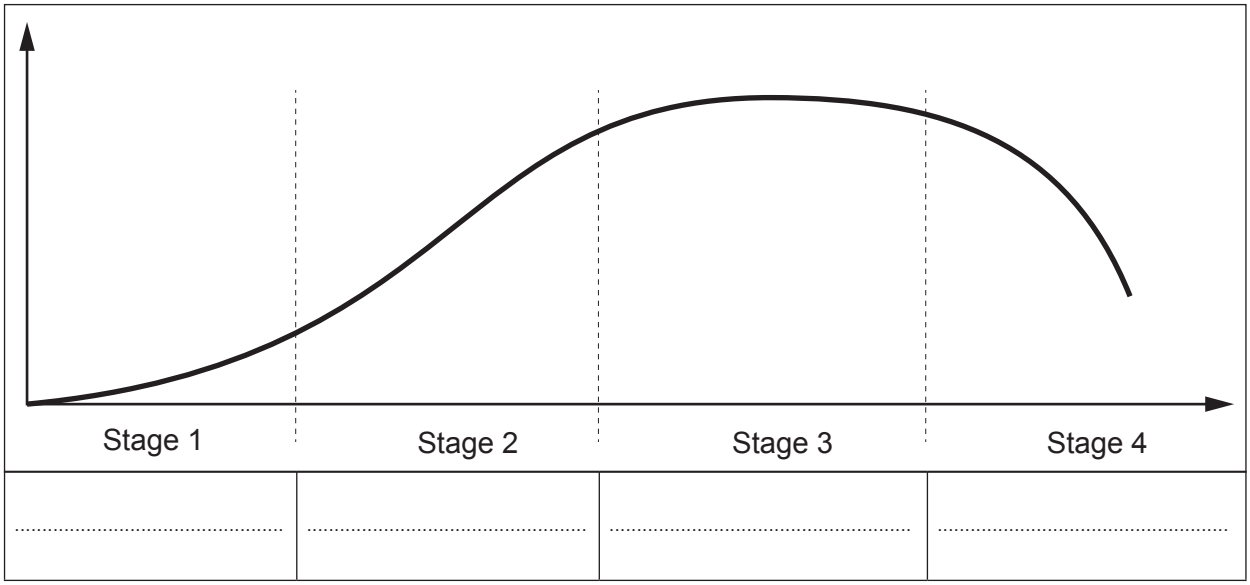

.....	.....	.....	.....

(b) The graph below shows the product life cycle for two different products.
Match the curve to the appropriate product by writing **A** or **B** in the correct box below. [2]

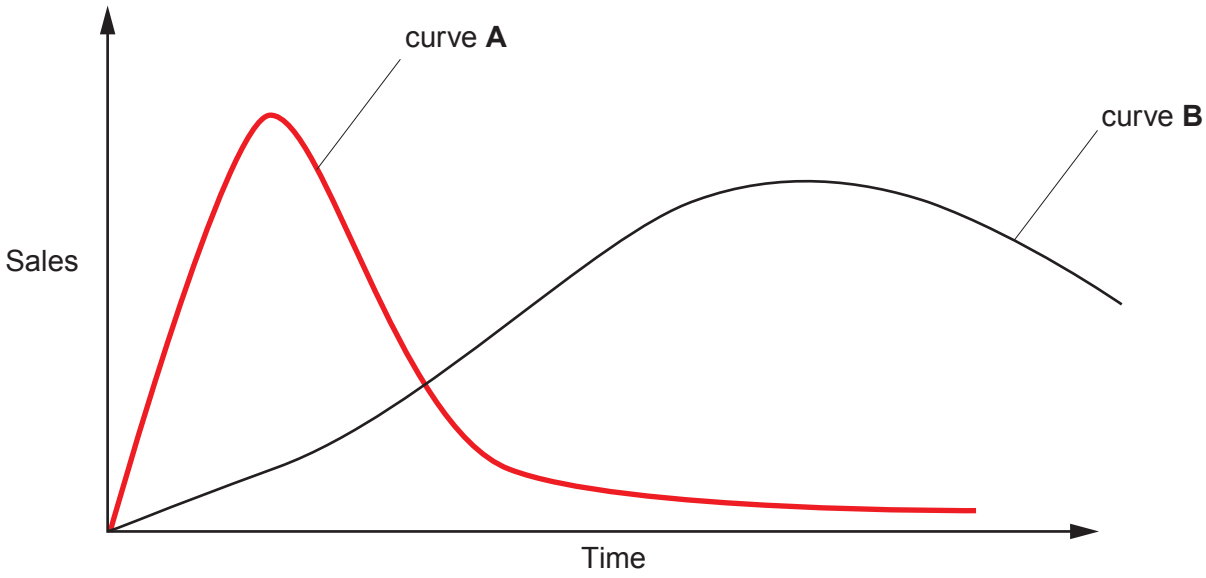

Fidget spinner matches curve	Smart watch matches curve .....

Examiner only

(c) Explain what is involved in a **Life Cycle Analysis** when bringing new products to the market. [4]

.....

.....

.....

.....

.....

.....

3601U101 05

Examiner only

3. The images below show different energy sources.

(a) Complete the table below by stating whether the energy source is renewable or non-renewable. 4 x [1]

Energy source	**Renewable/non-renewable**
Coal	.....
Nuclear	.....
Solar	.....
Wind	.....

Examiner only

(b) Describe **one** advantage for **each** energy source. 4 x [2]

Energy source	Advantage
Coal	....
Nuclear	....
Solar	....
Wind	....

(c) Explain why solar panels are not yet widely used on electric cars. [3]

.....

.....

.....

.....

.....

3601U101 07

Examiner only

4. Apple is a leading technology company. Apple regularly uses aluminium for the case or body on its products.

(a) Describe **two** properties of aluminium that make it suitable for the body or casing of Apple products. 2 x [2]

Property 1:

.....

.....

.....

Property 2:

.....

.....

.....

(b) Apple occasionally releases special edition products such as the 'RED' phone.

(i) Explain why the 'RED' phone would be batch produced. [3]

.....

.....

.....

.....

.....

(ii) Components for the manufacturing of the 'RED' phone are ordered using JIT (Just In Time). Explain the term 'Just in Time'. [3]

.....

.....

.....

.....

.....

Examiner only

(c) Analyse how Apple has developed innovative technologies and products. Historical and current innovations should be discussed together with comparisons to its major competitors. [10]

Marks will be awarded for the content of the answer and the quality of written communication.

.....

.....

.....

.....

.....

.....

.....

.....

.....

.....

.....

.....

.....

.....

.....

3601U101 09

Examiner only

5. A games controller contains electrical and mechanical components.

(a) A commercially produced printed circuit board (PCB) may require a protective surface finish like a solder mask or solder resist. Explain why this protective surface finish is required within the context of a commercial soldering process. [5]

.....

.....

.....

.....

.....

.....

.....

.....

Examiner only

(b) Study the two images of prototype printed circuit boards (PCBs) shown below.

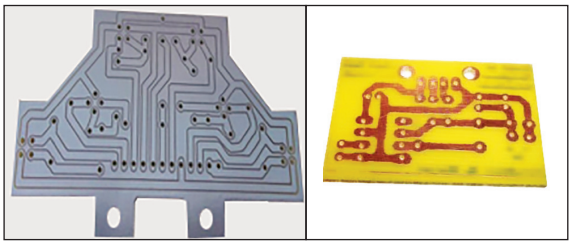

(i) Describe why copper is used for the solder side of the PCB. [2]

.....

.....

.....

(ii) Name a suitable material for the component side of the PCB and discuss a physical property that makes it appropriate.

Name of material: ..... [1]

Physical property: ..... [2]

.....

.....

.....

(c) Evaluate the process of soldering a prototype PCB within a typical school workshop environment in comparison with commercial processes. [5]

.....

.....

.....

.....

.....

.....

.....

.....

Examiner only

(d) Mechanical properties must be considered when selecting materials for the body/case of the games controller. Evaluate the mechanical material properties required. [5]

.....

.....

.....

.....

.....

.....

.....

.....

BLANK PAGE

Examiner only

6. An automatic door system is shown below. A programmable control system operates the door. The system has an **Infrared Sensor** which senses a person's body heat. The **Infrared Sensor** is 'on' when a person stands in front of it. The **Infrared Sensor** is 'off' when no one is in front of the sensor.

Infrared Sensor

(a) (i) Explain why a flowchart could be used when programming the control system. [2]

.....

.....

.....

(ii) Explain **one** advantage of using a macro or subroutine when programming. [2]

.....

.....

.....

Examiner only

(iii) Draw a block diagram for the automatic door system in the space below. [4]

(iv) Explain why a designer or engineer might use a block diagram. [2]

.....

.....

.....

Examiner only

(b) Complete the flowchart for the automatic door below by adding the correct statements and missing feedback loops. [9]

Note: do not write the subroutines themselves.

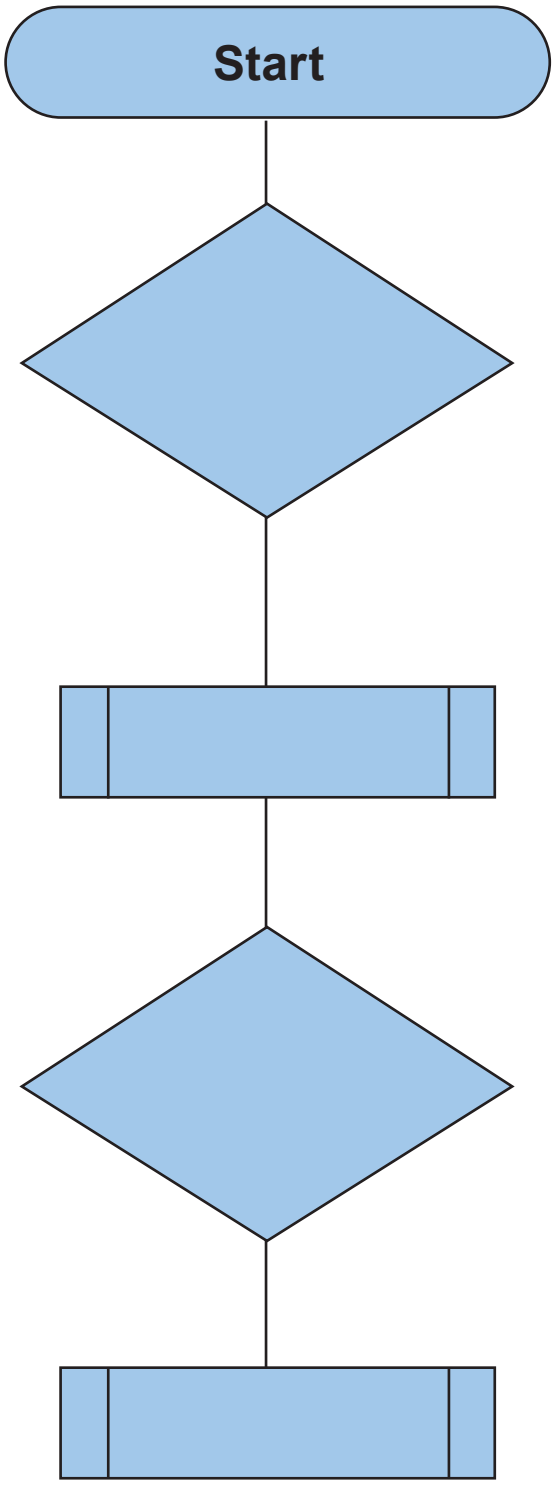

Examiner only

(c) The mechanical system used in the automatic door is shown below.

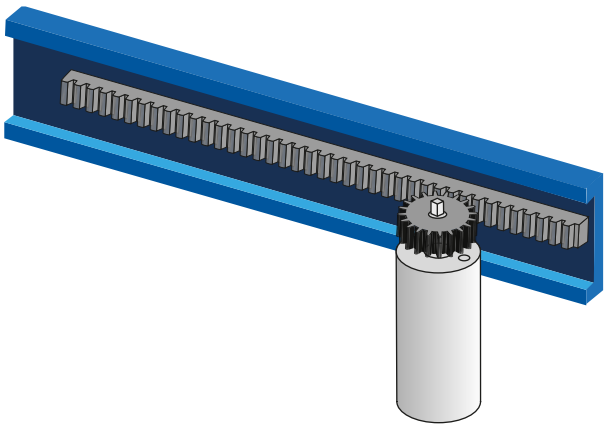

(i) State the correct name of the gear system shown above. [1]

.....

(ii) The diagram below shows the Spur Gear with a radius of 65 mm.
Calculate the distance in mm the door will move in one rotation of the gear. [3]

(Show all workings)

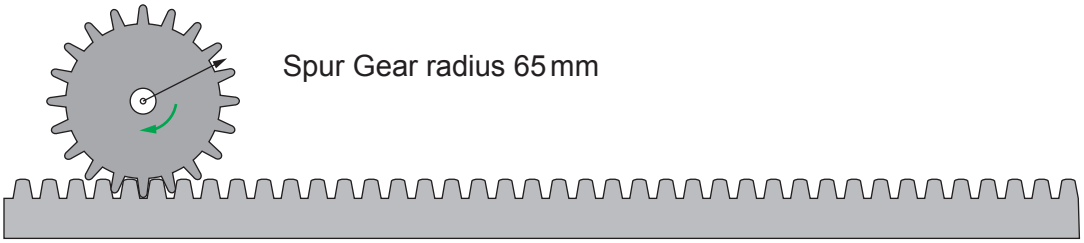

.....

.....

.....

.....

.....

.....

Examiner only

(iii) The table below shows a parts list for the automatic door.
Calculate the total cost and the total inclusive of 20% VAT. [2]

Part	Unit cost (£)	Number required	Cost (£)
Motor	£100	2	.....
Infrared sensor	£150	2	.....
Gears	£40	2	.....
Control system	£200	1	.....
		Total cost (£)	.....
		Total cost (£) inclusive of 20% VAT	.....

END OF PAPER

Examiner only

For continuation only.